GigaTera®
beyond light

Product Specification

KMW INC.
183-6, Yeongcheon-ro, Hwaseong-si, Gyeonggi-do, South Korea
Tel : +82-31-370-8866 / E-Mail : ledsales@gigateraled.com / Homepage : www.gigateraled.com

SUFA-M 1.2KW
LED Sports Flood Lighting

Applications
Sport Stadiums
Indoor Venues
Ports

Certification
-

Description
Tiltable and rotatable for easy aiming
Stable cooling structure that points the heat release
Boosted installation efficiency thanks to the slimmed-down product
Linkage with wired, wireless control systems

Specifications

Model Name		SFM1K2	
Power Consumption		1200W (200W x 6)	
Light Source		High Power LED Chips	
Correlated Color Temperature		5000K (3000K / 4000K / 5700K available)	
Luminous Flux *		120,000 lm	126,000 lm
Luminous Efficacy *		100 lm/W	105 lm/W
LED Driving Current		-	-
Color Rendering Index		80 Ra	70 Ra
Light Distribution		15° / 20° / 30° / 45°	
LED Chip Manufacturer		LG	
Input Voltage		200 ~ 277 Vac	347 ~ 480 Vac
Input Current		Max 7.0A (@200 Vac)	Max 4.4A(@347 Vac)
Power Factor		≥0.9 at Max load	
Frequency		50 / 60 Hz	
Fixture Manufacturer		KMW INC. / Made in Korea	
Size (W x L x H)		18.7 x 30.7 x 24.0 (inch)	475 x 780 x 610 (mm)
Weight (Driver excluded)		46.3 lb	21.0 Kg
Material	**Body**	Cast Aluminum	
	Optic	Silver Coating Reflector	
	Cover	Tempered Glass 3.2T (Clear)	
Finish		Powder Coating	
IP Rating		IP66	
Mounting Option		Wall Mount	
Operating Temperature		-22°F ~ 131°F	-30°C ~ 55°C
Life Time		50,000 Hours (@77°F / 25°C)	

Option

Control System	Wireless (ZigBee) / Wired (RS-485)

***Tolerance : ± 5%**

Photometry
See photometric .ies files for details.

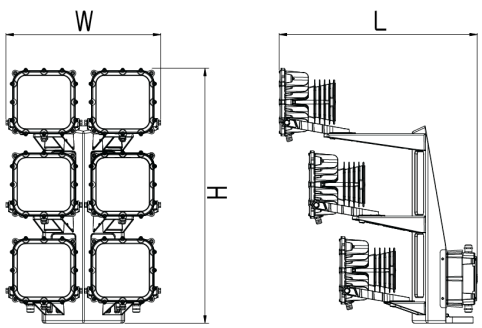

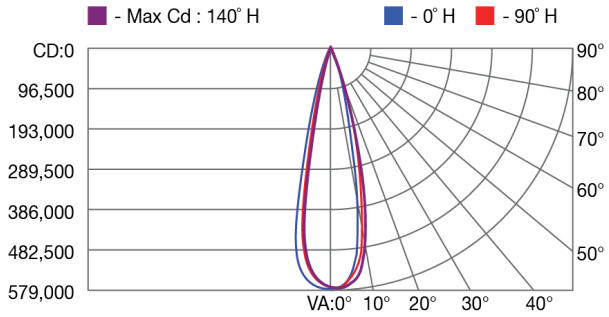

[5000K]

KMW INC.
183-6, Yeongcheon-ro, Hwaseong-si, Gyeonggi-do, South Korea
Tel : +82-31-370-8866 / E-Mail : ledsales@gigateraled.com / Homepage : www.gigateraled.com

Control System (Optional)

ZigBee	Wireless Control
Input Voltage	15 Vdc
Max. Power Consumption	0.3 W (@15Vdc)
Standard	2.4 GHz - IEEE 802.15.4 (Compatible)
Network	Mesh
RF Tx Power	Max. +8 dBm (Typ. 5 dBm)
Data Rate	250 kbps
Security	128 bit AES Encryption Algorithms
Dimmer	PWM, 0 – 10 Vdc
Antenna	Omni Type, 2 dBi
RS-485	Wired Control
Input Voltage	15 Vdc
Max. Power Consumption	0.2 W (@15Vdc)
Communication Method	RS-485
Data Rate	38400 bps, 8-N-1
Dimmer Level	PWM, 0 – 10 Vdc

Power Box Specifications

Model Name	SUFA-M Power Box	
Power Consumption	1.2KW	
Input Voltage	200 ~ 277 Vac	347 ~ 480 Vac
Input Current	Max 7.0A (@200 Vac)	Max 4.4A(@347 Vac)
Surge Protection	Line-Line 20kV, Line-FG 20kV	
Driver Manufacturer	KMW INC. / Made in Korea	
Size (W x L x H)	6.3 x 6.7 x 20.5 (inch)	160 x 170.5 x 520 (mm)
Weight (Driver Included)	28.7 lb	13.0 kg

GigaTera® beyond light by KMW

Copyright © 2015 KMW INC. All rights reserved. / www.kmw.co.kr
The information in this document is subject to change without notice. / Document Revision V1.8 / 2015.11.02